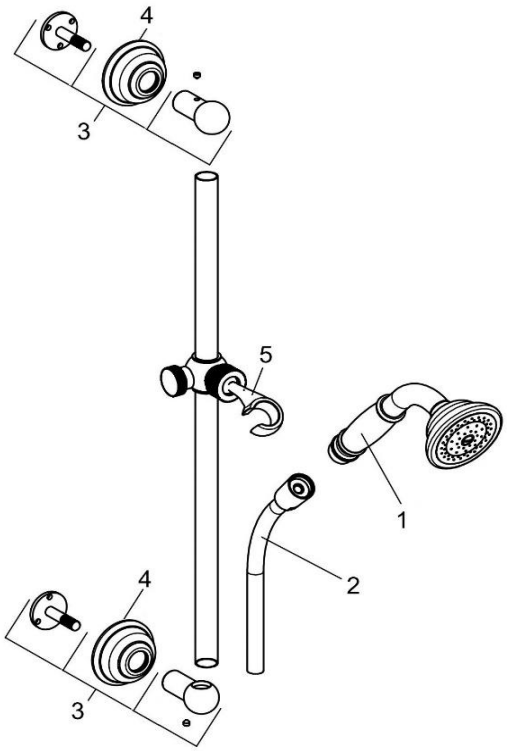

2710405		Brausegarnitur	Shower Combination
1	7678305-00	HANDBRAUSE	HANDSHOWER
2	6105605-00	BRAUSESCHLAUCH	SHOWER HOSE
3	7708605-00	WANDHALTER	WALLHOOK
4	7582305-00	ROSETTE	ESCUTCHEON
5	7508605-00	GLEITSCHIEBER	GILDER